CANOPY WALL UNIT - 60CM

IK82 | Rangehood

598×500×580-980mm



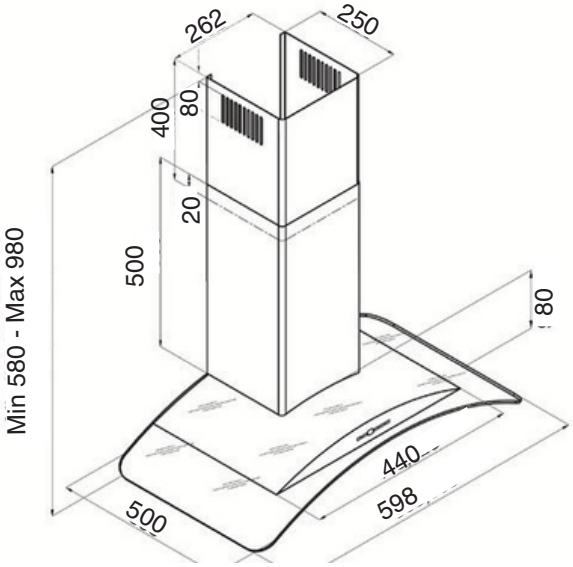

SPECIFICATIONS

Material	Stainless Steel
Net Capacity	Up to 800m3/hr
Controls	Soft touch
Speeds	5
Noise Rating	47.4-69.6 dBA
Wattage	250W

FEATURES

Aluminium filter (Dishwasher safe)
N-RV system
Illumination - Two 3 watt LED's
Can be recirculated using charcoal filters (not included)
Cleaning indicator & timer function
2 year warranty

INCLUDED ACCESSORIES



Manual, Screws & Brackets

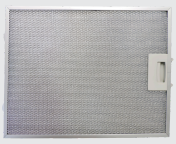

Aluminium Filter

REQUIRED ACCESSORIES

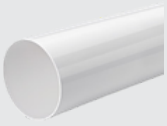

150mm Ducting
(Not Included)

Revision Date: 3-12-2025