Installation diagram

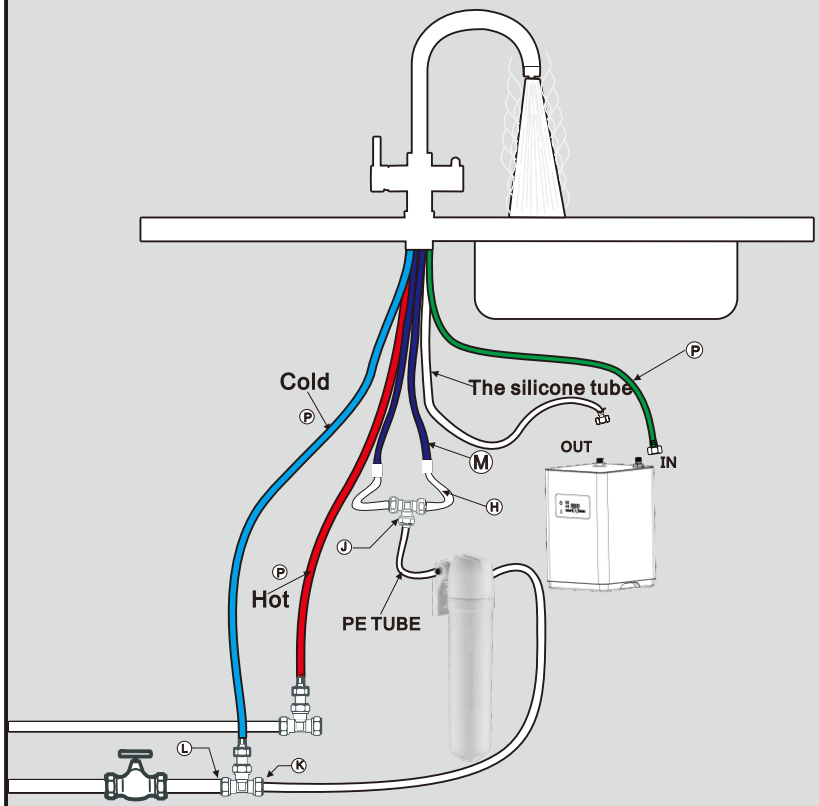

CONNECTORS

NO	Description	Qty	Picture	Packed in
J	1/4" T quick connector	1		Tap box
K	G 1/2" (Female) & PE tube adaptor	1		Tap box
L	G1/2" T-piece	1		Tap box
M	Filter hoses	2		Tap box
H	PE pipe	1		Tap box
P	Green,blue & red hoses	3		Tap box

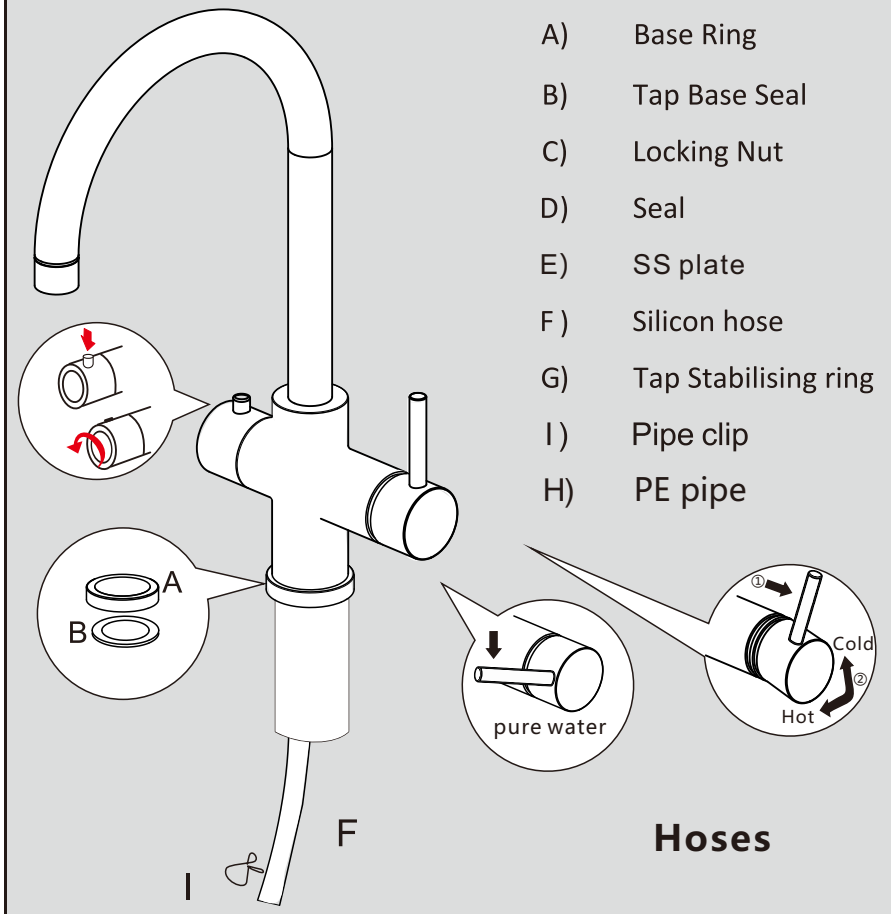

A) Base Ring
B) Tap Base Seal
C) Locking Nut
D) Seal
E) SS plate
F) Silicon hose
G) Tap Stabilising ring
I) Pipe clip
H) PE pipe

Fixing sets


G


D


E


C

Hoses

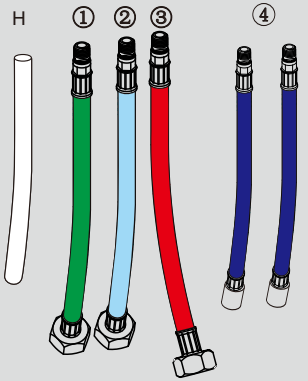

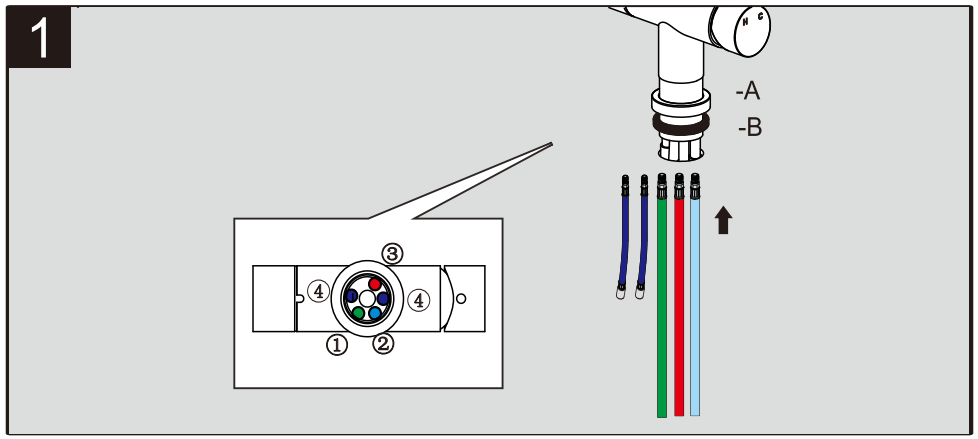
1
-A
-B
③
④
④
①
②

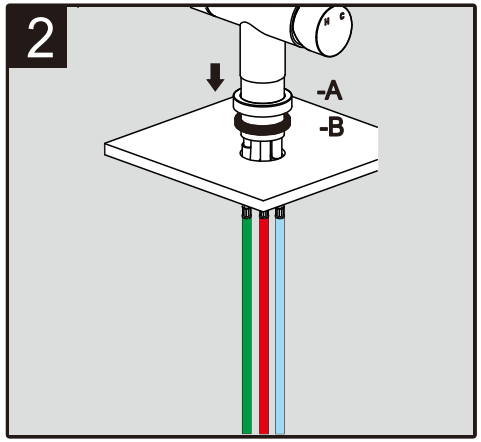
2
-A
-B

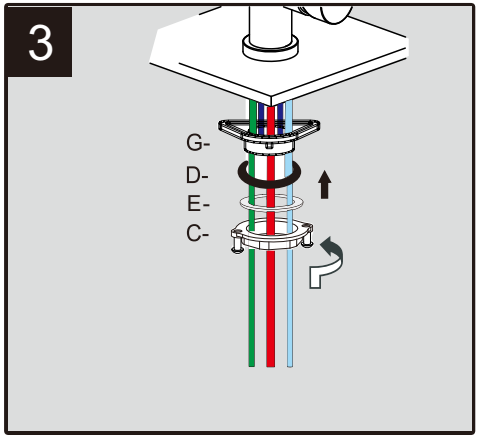
3
G-
D-
E-
C-

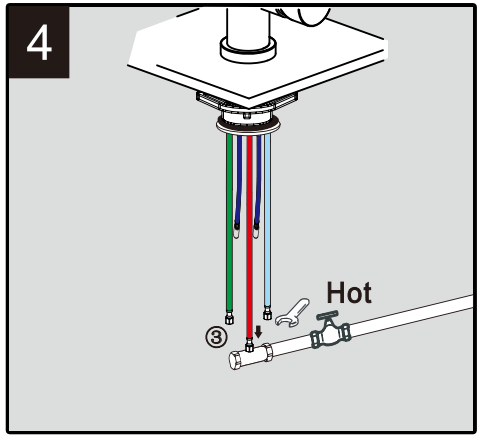
4
Hot
③

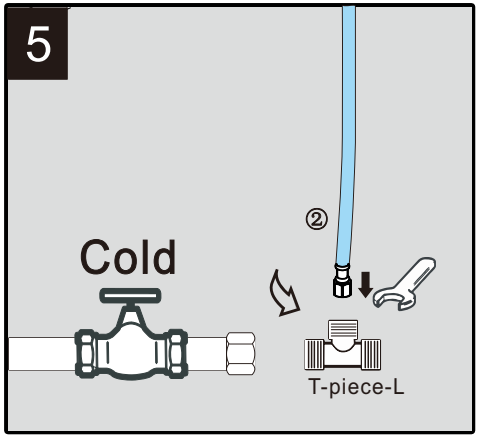
5
Cold
②
T-piece-L

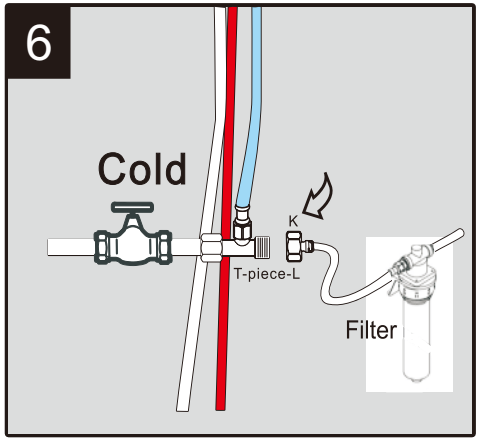
6
Cold
K
T-piece-L
Filter

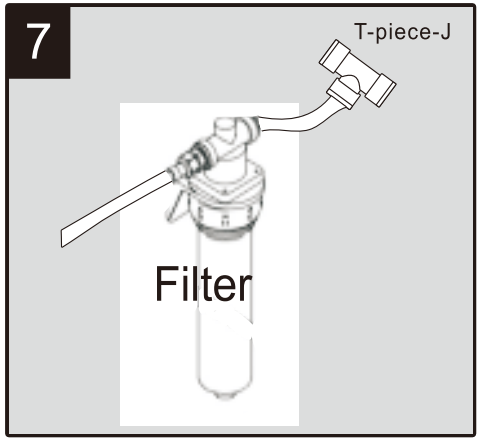
7
T-piece-J
Filter

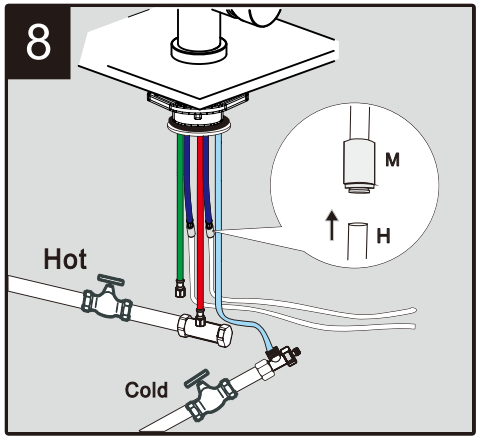
8
M
H
Hot
Cold

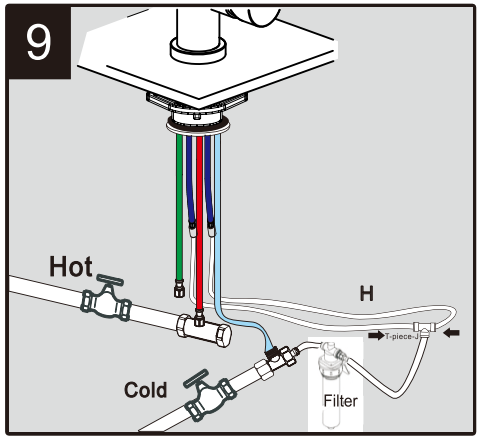
9
Hot
H
Cold
Filter

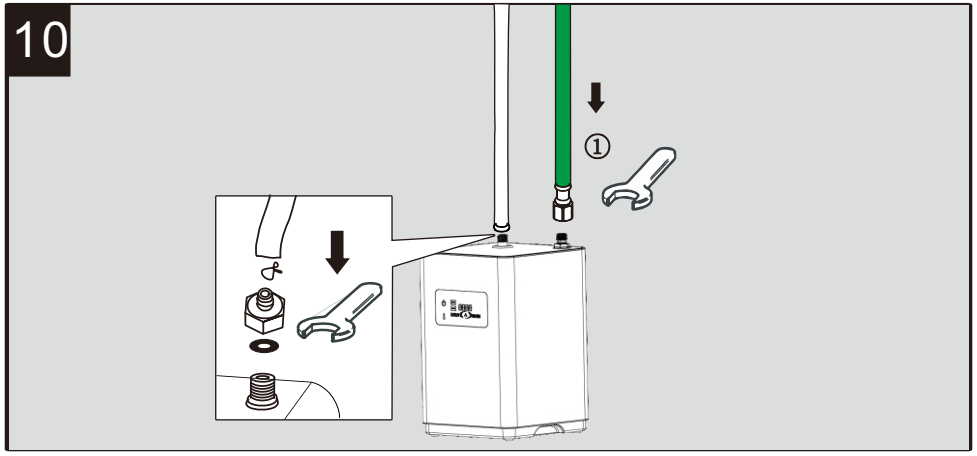
10
①