GORE

IK1740 | Southland Collection

400 x 400 x 220mm



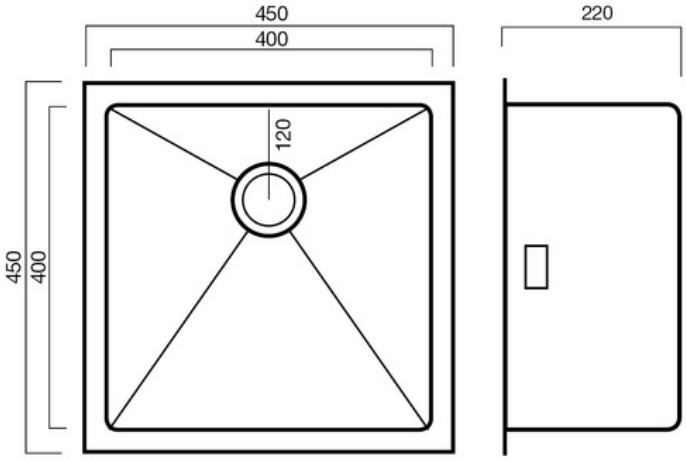

SPECIFICATIONS

Material	316 grade
Thickness	1.2mm
Finish	Satin
External Corner Radius	5mm
Internal Corner Radius	15mm
Suggested Cabinet Size	50cm

FEATURES

Top, under or flush mounted
Fully insulated
Handmade construction
Built-in overflow
Rear waste placement
316 marine-grade stainless steel
Lifetime warranty (50 years) | 12 month warranty on spare parts

INCLUDED ACCESSORIES



Overflow Waste



Overflow Kit



Top Mounting Clips (if required)

Revision Date: 4-06-2026