450×200

IK8880 L\R | Sink Station

450×400×220 | 200×400×220



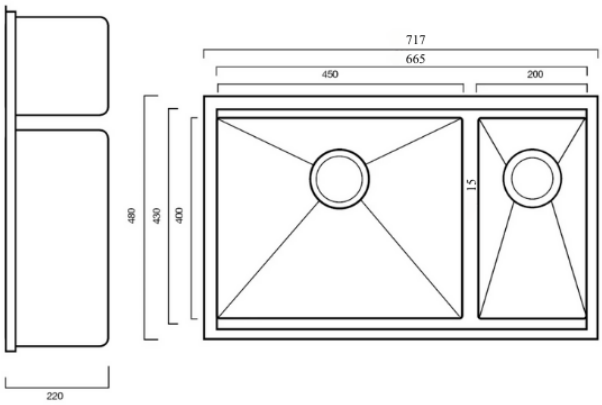

*Please Note - Sink stations require a wider benchtop to allow for an extra 30mm (total 480mm)

SPECIFICATIONS

Material	304 grade
Thickness	1.2mm
Finish	Satin
External Corner Radius	-
Internal Corner Radius	10mm
Suggested Cabinet Size	80cm

FEATURES

Top, under or flush mounted
Fully insulated
Handmade construction
Built-in overflow
Rear waste placement
Lifetime warranty (50 years) | 12 month warranty on spare parts

INCLUDED ACCESSORIES



Overflow Waste



Overflow Kit



Clips
(If top mounting)



Round Roller Mat



Chopping Board

0800 83 83 84 | orders@ikon.nz | www.ikon.nz | 168 Kent Street, Frankton, Hamilton

Revision Date: 3-12-2025