Installation diagram

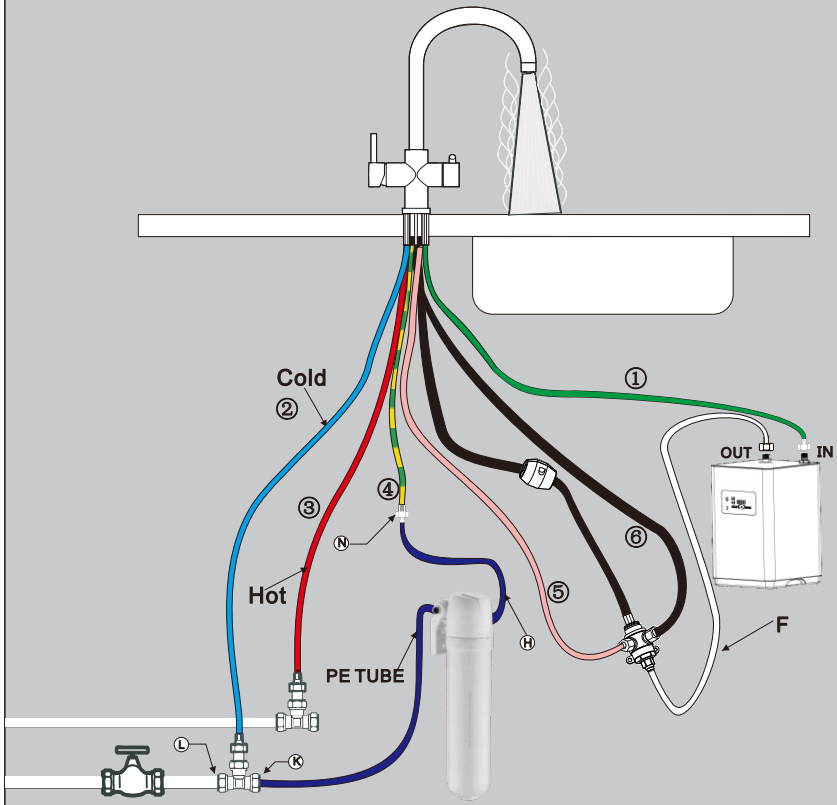

CONNECTORS

NO	Description	Qty	Picture	NO	Description	Qty	Picture
A	Base ring	1		H	Blue PE pipe	2	
B	Tap base seal	1		K	G 1/2" (Female) & PE tube adaptor	1	
C	Locking nut	1		L	G1/2" T-piece	1	
D	Weight ball	1		N	G1/2" quick connector	1	
E	SS plate	1		M	Srew	2	
F	boiling hose	1		P	Srew	2	
G	Valve body	1					

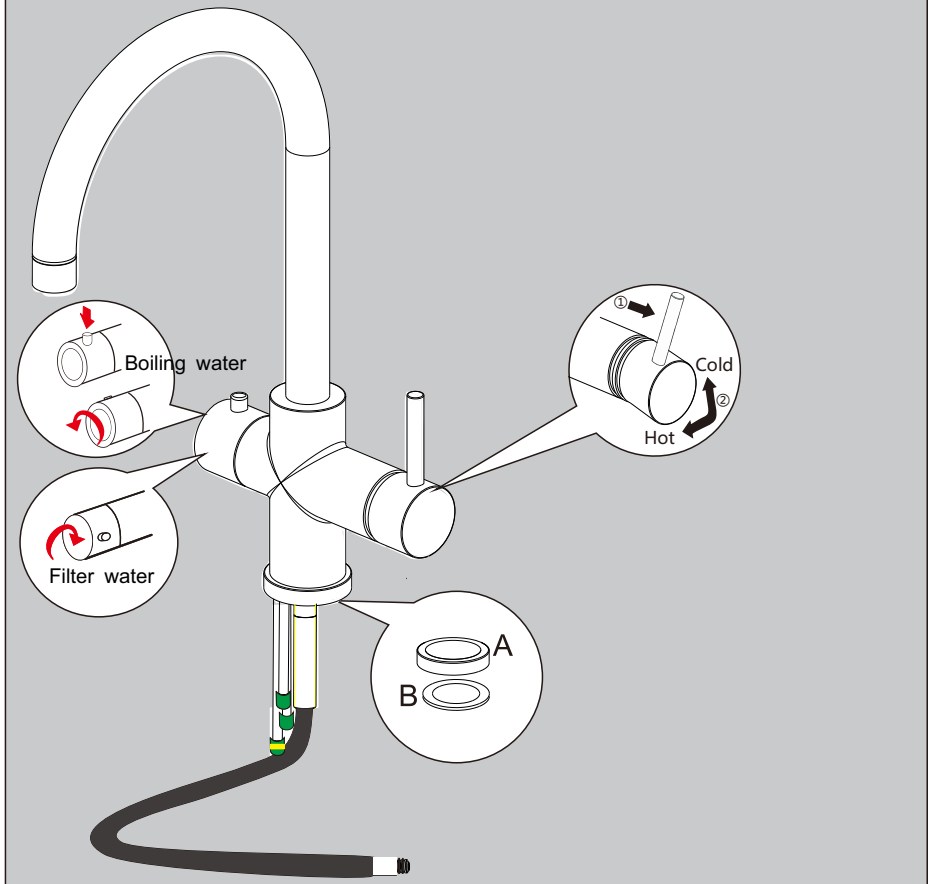

Hoses

1)Green: Boiling water inlet hose
2) Blue : Cold water inlet hose
3) Red : Hot water inlet hose
4) Kelly : Filtered water inlet hose
5)Pink:Filtered water outlet hose
6)Black:Mixed water outlet hose
F)Natural:Boiling water outlet hose
H)Blue:Filter connection hose

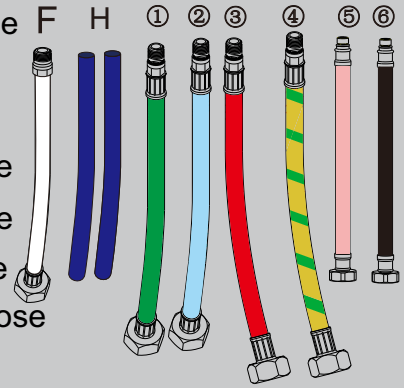

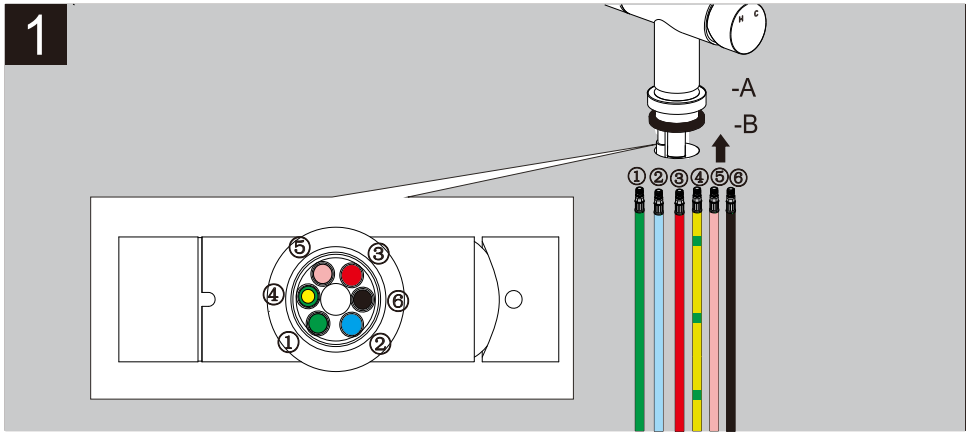
1
-A
-B
①②③④⑤⑥

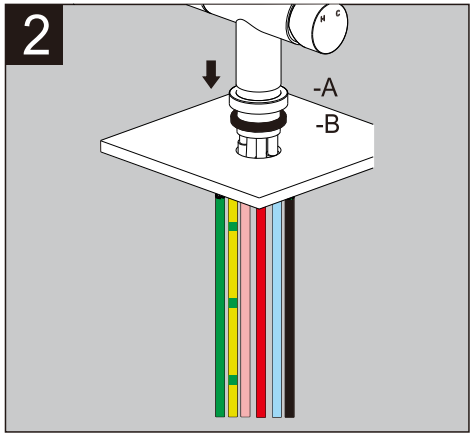
2
-A
-B

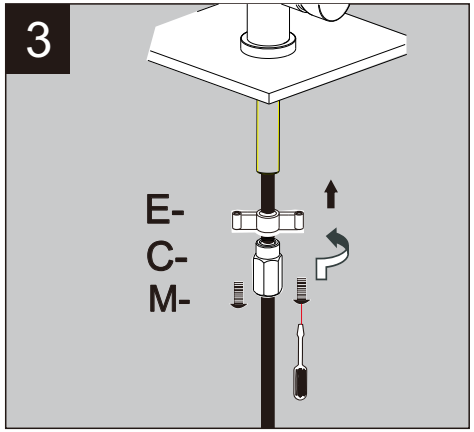
3
E-
C-
M-

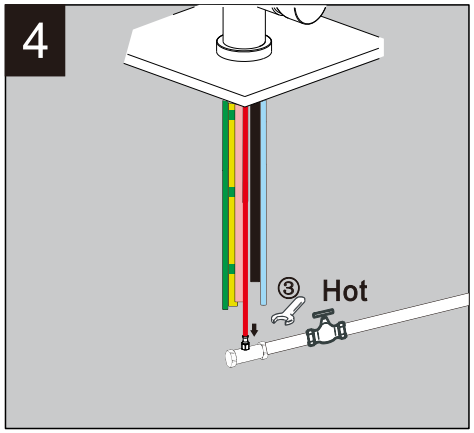
4
③ Hot

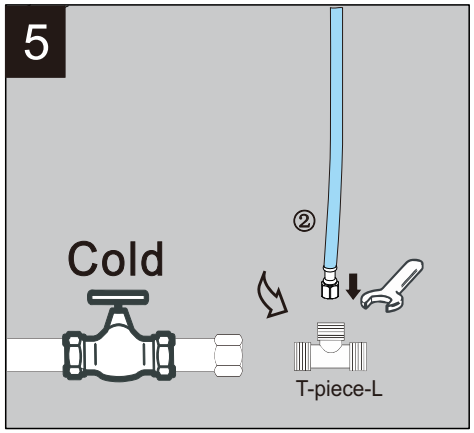
5
Cold
②
T-piece-L

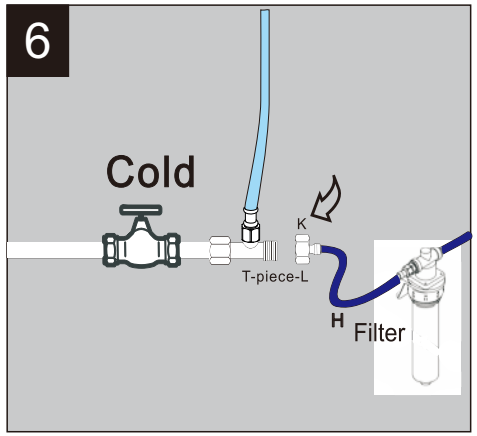
6
Cold
K
T-piece-L
H
Filter

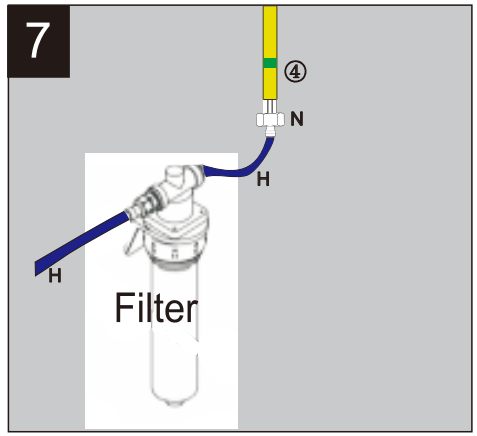
7
④
N
H
H
Filter

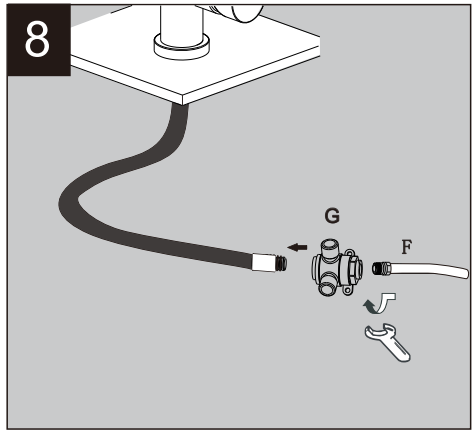
8
G
F

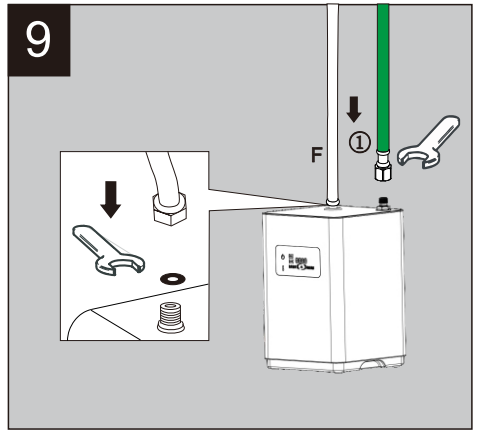
9
F
①

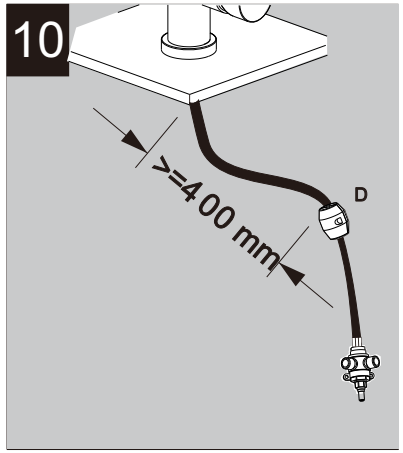
10
>=400 mm
D

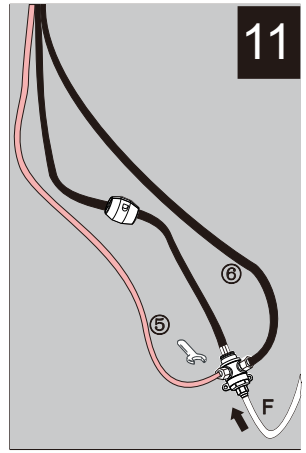
11
⑥
⑤
F

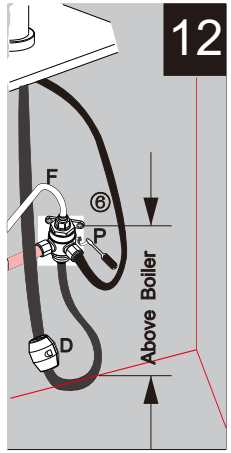
12
F
⑥
P
D
Above Boiler